POLES & LIGHTING

DAB6

Job Name: _____ Client Name: _____

Job Location: _____ Quote: _____

Type: _____ Quote Date: _____

AV POLES & LIGHTING
43827 Division St.
Lancaster, CA 93535
Toll Free: (844) 770-AVPL
Fax: (661) 945-2764
sales@avpltg.com
www.avpltg.com

DOME TOP ALUMINUM ROUND BOLLARD

DIMENSIONS

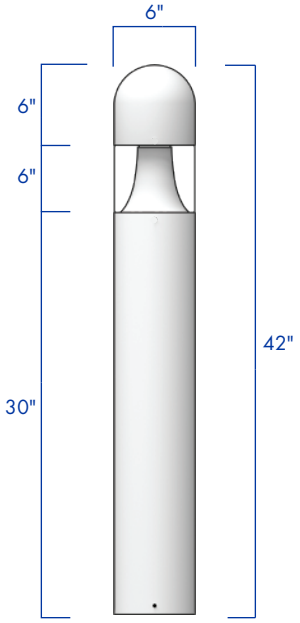

ANCHORAGE

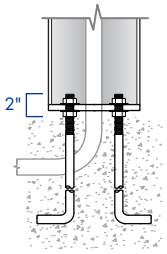

Anchor Bolt
2" Minimum Projection

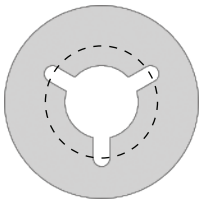

Anchor Plate
6" Diameter
3.5" B.C.D.
2.25" Conduit Opening

DESCRIPTION

An outstanding traditional design and authentic appearance that is suitable for a variety of lighting applications. The DAB6 series by AV Poles and Lighting is ideal for courtyards, pathways, and all low level lighting applications.

FEATURES

- Round extruded aluminum construction
- Stainless steel hardware
- Acrylic injection molded lenses with smooth clear or opal finish.
- 0-10V dimmable driver
- 10-20KV surge protection
- IP67 rated modules - 5 year warranty
- Up to 180 Lumens Per Watt output
- Low maintenance cost with lifetime >54,000 hrs
- LED modules arranged in a Type V optic pattern for even light distribution.
- TGIC thermoset polyester powder coat finish is electrostatically applied at a 3.0 mil nominal thickness. A five stage metal pre-treatment process and sealer provide maximum corrosion resistance. The powder top coat is baked in excess of 400 degrees for supreme endurance.

SUITABLE FOR WET LOCATIONS

ORDERING INFORMATION

AVPL - _____ - _____ - _____ - _____ - _____ - _____ - _____ - _____

BOLLARD	HEIGHT	WATTAGE	COLOR TEMP	VOLTAGE	OPTICS	FINISH	OPTIONS
DAB6	24"	18W 350mA	3000K WARM WHITE	120-277V VOLTAGE SENSING	DR	DARK BRONZE	STANCHION MOUNT
	30"	26W 525mA	4000K NEUTRAL WHITE	347-480V VOLTAGE SENSING		BLACK	HOUSE-SIDE SHIELD
	36"	36W 700mA	5000K COOL WHITE		IL	WHITE	PHOTOCELL BUTTON
	42"	52W 1050mA				GREY	
					OL	GREEN	
					WA*		
					*APPLY LLF OF 10% TO LUMEN OUTPUT CHART	ALL RAL COLORS AVAILABLE	

LUMEN OUTPUT CHART

3K	18W 350mA	26W 525mA	36W 700mA	52W 1050mA
Type V	2,462	3,349	4,348	5,865

4K	18W 350mA	26W 525mA	36W 700mA	52W 1050mA
Type V	2,592	3,515	4,579	6,156

5K	18W 350mA	26W 525mA	36W 700mA	52W 1050mA
Type V	2,617	3,550	4,624	6,217