POLES & LIGHTING

BW

Job Name: _____ Client Name: _____

Job Location: _____ Quote: _____

Type: _____ Quote Date: _____

AV POLES & LIGHTING
43827 Division St.
Lancaster, CA 93535
Toll Free: (844) 770-AVPL
Fax: (661) 945-2764
sales@avpltg.com
www.avpltg.com

BOARDWALK SERIES

DIMENSIONS

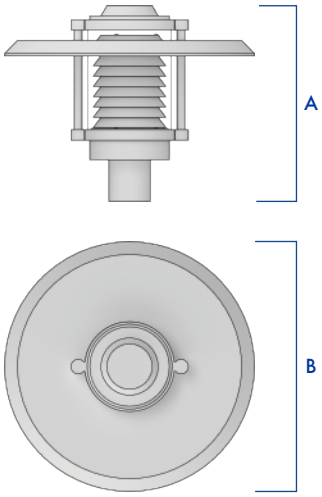

FIXTURE	A	B
BW	19"	22"

DESCRIPTION

An outstanding traditional design and authentic appearance that is suitable for a variety of lighting applications. The BW by AV Poles and Lighting is ideal for commercial, municipal, and design build lighting applications.

FEATURES

- Spun aluminum reflector, cast aluminum body and fitter
- Stainless steel hardware
- 0-10V dimmable driver
- 10-20KV surge protection
- IP67 rated modules - 5 year warranty
- Up to 180 Lumens Per Watt output
- Low maintenance cost with lifetime >54,000 hrs
- LED modules arranged in a Type V optic pattern for even light distribution.
- Lens available in acrylic or polycarbonate construction with opal or clear smooth finish.
- TGIC thermoset polyester powder coat finish is electrostatically applied at a 3.0 mil nominal thickness. A five stage metal pre-treatment process and sealer provide maximum corrosion resistance. The powder top coat is baked in excess of 400 degrees for supreme endurance.

SUITABLE FOR WET LOCATIONS

ORDERING INFORMATION

AVPL - _____ - _____ - _____ - _____ - _____ - _____ - _____ - _____ - _____

LUMINAIRE	WATTAGE	COLOR TEMP	VOLTAGE	LENS	REFLECTOR	MOUNTING	FINISH	OPTIONS
BW	40W 350mA	3000K WARM WHITE	120-277V VOLTAGE SENSING	CSA CLEAR SMOOTH ACRYLIC	AR ANGLED	PT23 Ø2.375" TENON	DARK BRONZE	LOUVERS INTERNAL
	58W 525mA	4000K NEUTRAL WHITE	347-480V VOLTAGE SENSING	CSP CLEAR SMOOTH POLYCARBONATE	FR FLAT	PT27 Ø2.875" TENON	BLACK	HOUSE-SIDE SHIELD
	80W 700mA	5000K COOL WHITE		OSA* OPAL SMOOTH ACYLIC		PT30 Ø3" TENON	WHITE	PHOTOCELL BUTTON
	116W 1050mA			OSP* OPAL SMOOTH POLYCARBONATE			GREY	FSP211 MOTION SENSOR
							GREEN	3PIN RECEPTACLE
								7PIN RECEPTACLE
				*APPLY LLF OF 10% TO LUMEN OUTPUT CHART		CONTACT FACTORY FOR OTHER SIZES	ALL RAL COLORS AVAILABLE	

LUMEN OUTPUT CHART

3K		40W 350mA	58W 525mA	80W 700mA	116W 1050mA
	Type V	5,472	7,470	9,664	13,084

4K		40W 350mA	58W 525mA	80W 700mA	116W 1050mA
	Type V	5,760	7,841	10,176	13,827

5K		40W 350mA	58W 525mA	80W 700mA	116W 1050mA
	Type V	5,817	7,919	10,277	13,965